DCD701 AKKU-BOHRMASCHINE 1

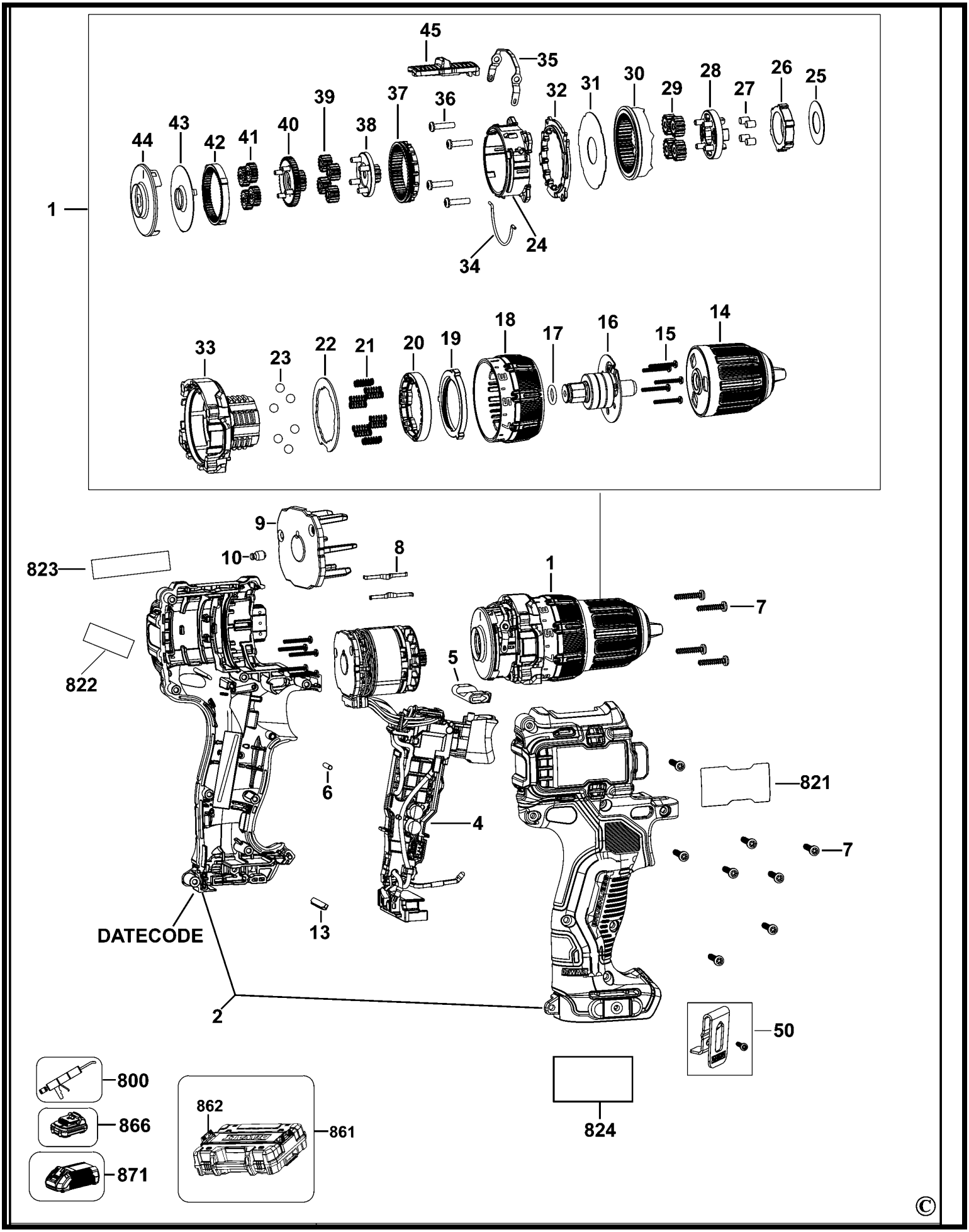

©